Over voltage protector

Description

The P1495A1 is an Over-Voltage-Protection (OVP) load switch with adjustable OVLO threshold voltage. The device will switch off internal MOSFET to disconnect IN to OUT to protect load when any of input voltage over the threshold.

The P1495A1 has function to clamp the output current which can be set by external resistor. When the OVLO input set below the external OVLO select voltage, the P1495A1 automatically chooses the internal fixed OVLO threshold voltage. The over voltage protection threshold voltage can be adjusted with external resistor divider and the OVLO threshold voltage range is 4.5V~15V. The Over temperature protection (OTP) function monitors chip temperature to protect the device.

The P1495A1 is available in 9-Ball wafer level Chip-Scale-Package. Standard products are Pb-free and Halogen-free.

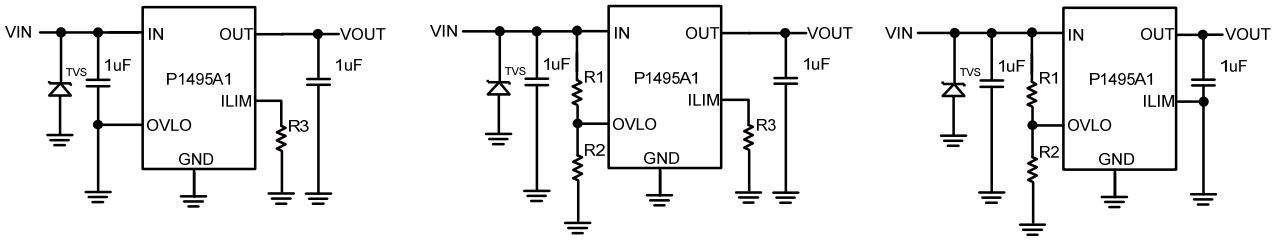

OVP w/i Internal OVLO Threshold

OVP w/i External OVLO Threshold

OVP w/i External OVLO Threshold, w/o OCP

Figure 1: Typical Application

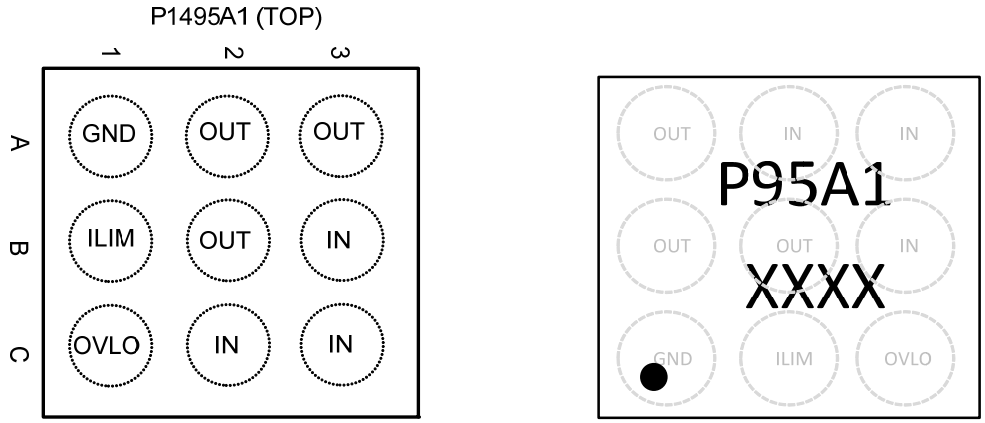

Figure 2: Pin order (Top view) and Marking (Top view)

Feature

- Maximum input voltage : 29V
- Switch ON resistance : 32mΩTyp.
- Ultra fast OVP response time: 50ns Typ.
- Programmed over-current protection
- OVLO set threshold

  Reference voltage for adjustable version

  - 1.2V : P1495A1 with ±3% accuracy

Application

- Mobile Handsets and Tablets
- Portable Media Players
- Peripherals

Pin Definitions

Pin No.	Symbol	Descriptions
B3, C2, C3	IN	Switch Input and Device Power Supply.
A2, A3, B2	OUT	Switch Output to Load.
C1	OVLO	External OVLO adjustment. Connect a resistor-divider to set different OVLO threshold, V_{OVLO}=1.2x(1+R1/R2) as shown typical application diagram. Connect OVLO to GND when using the internal fixed threshold voltage. R2=120kohm is recommended.
A1	GND	Ground
B1	ILIM	Current limit adjustment. Connect a resistor to GND to set over current threshold. I_{Lim} = 2400÷R3. Short ILIM to GND will **disable** current limitation.

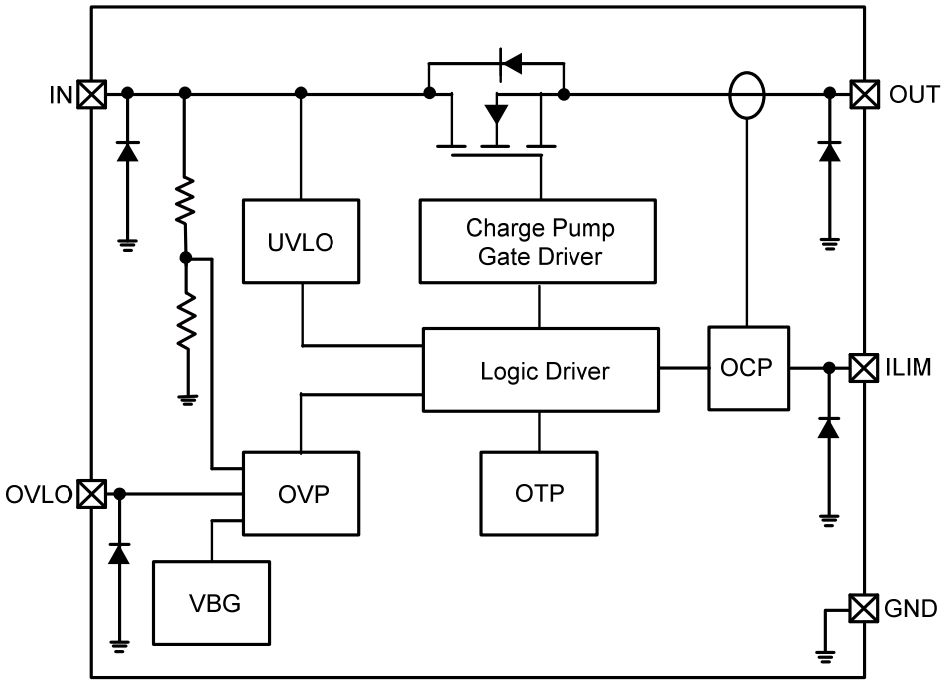

Figure 3: IC Block Diagram

Absolute maximum rating

Parameter(Note1)	Symbol	Value	Units
Input voltage (IN pin)	V_{IN}	-0.3 ~ 29	V
Output voltage (OUT pin)	V_{OUT}	-0.3 ~ 15	V
Input voltage (OVLO pin)	V_{OVLO}	-0.3 ~ 15	V
Thermal resistance	$R_{\theta JA}$	TBD	℃/W
Junction temperature	T_J	150	℃
Lead temperature(10s)	T_L	260	℃
Storage temperature	Tstg	-55~150	℃
ESD Ratings	HBM	±2000	V
	MM	±500	V

Note 1: Stresses greater than those listed under "Absolute Maximum Ratings" may cause permanent damage to the device. These are stress ratings only, and functional operation of the device at these or any other conditions beyond those indicated under "Recommended Operating Conditions" is not implied. Exposure to "Absolute Maximum Ratings" for extended periods may affect device reliability.

Recommended Operating Conditions

Parameter	Symbol	Value	Units
Input voltage	V_{IN}	3.5~28	V
MAX Continuous Output current	I_{OUT}	3	A
Ambient operating temperature	Topr	-40~85	℃

Electrical Characteristics

（T_A=25℃，V_{IN}=5V，C_{IN}=1uF，C_{OUT}=4.7uF，unless otherwise specified.）

Parameter	Symbol	Conditions	Min.	Typ.	Max.	Units
Input voltage range	V_{IN}		3.5		28	V
Quiescent current	I_Q	NO Load，OVLO=GND V_{IN}=25V		110		uA
ON resistance	R_{ON}	V_{IN}=5V, I_{OUT}=1A		32	45	mΩ
OVP response time	t_{OVP}	V_{IN} rising, C_{IN}=C_L=0pF (Note2)		50		ns
OVLO set threshold	V_{OVLO_TH}			1.2		V
Adjust OVP voltage range	VOVP_EXTSEL	VIN rising	4.5		15	V
	VOVP_INTSEL			6.3		V
External OVLO select voltage	VOVLO_EXTSEL		0.4			V
Internal OVLO select voltage	VOVLO_INTSEL				0.6	V
OVP hysteresis voltage	VOVLO_HYS	VIN falling		0.15		V
UVLO threshold voltage	VUVLO	VIN rising			3.5	V
UVLO hysteresis voltage	VUVLO_HYS	VIN falling		0.25		V
OCP current	IOCP	Current rising. (R3=1Kohm in Fig.1)		2.4		A
Debounce Time	TDEB	VIN>UVLO to VOUT=VIN*10%		60		ms
Turn On Time	TON	VOUT=VIN*10% to VOUT=VIN*90%		300		us
Output discharge resistance	RDCHG	VIN=5V		700		Ω
OTP threshold temperature	TOTP	VIN=5V		140		℃
OTP hysteresis temperature	THYS	VIN=5V		20		℃

Note 2: Guaranteed by design

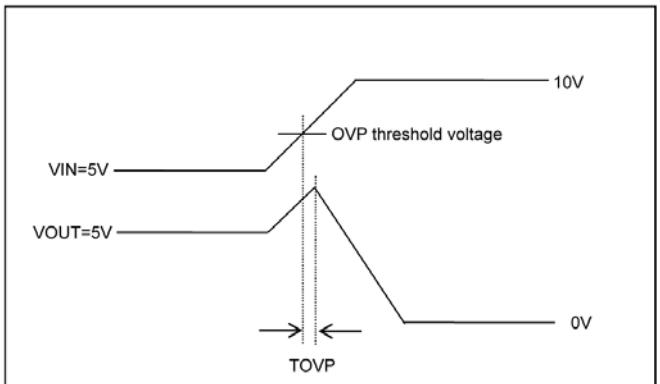

OVP response time test

Function descriptions

1. Under-voltage Lockout (UVLO)

The under-voltage lockout (UVLO) circuit disables the power switch until the input voltage reaches the UVLO turn on threshold. Built-in hysteresis prevents unwanted on and off cycling because of input voltage droop during turn on.

2. Over Current Protection (OCP)

If the load current rises to the OCP threshold, the device will decrease the output voltage so as to clamp the output current lower than the limit. Please be noted that in the OCP mode, the current might be smaller than the limited current.

Once the current is getting much less than the threshold, the device will release the OCP and output voltage will be back to the normal voltage.

The OCP threshold is calculated by the equation: I_{Lim} = 2400÷R3 (current in A, resistance in ohm).

3. Over-voltage Lockout (OVLO)

When VIN exceeds 6.3V (or the set value by external resistors), the over-voltage lockout (OVLO) circuit turns off the protected power switch.

The OVP threshold is calculated by the equation: V_{OVLO}=1.2x(1+R1/R2).

Typical Characteristics

VIN(yellow); VOUT(red); CURRENT(blue)

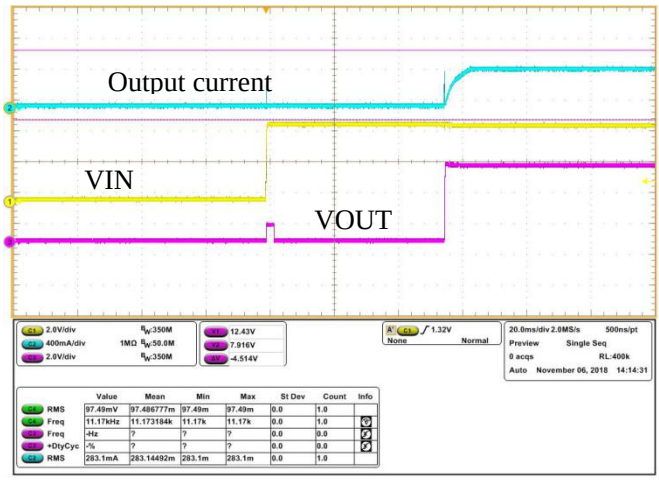

Fig 1. Start-up waveform

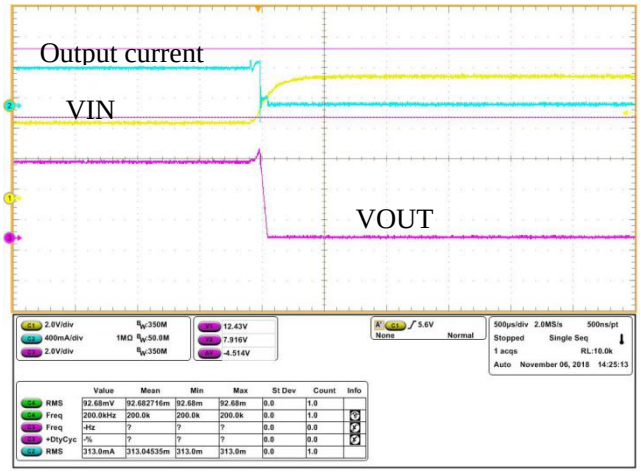

Fig2. OVP response

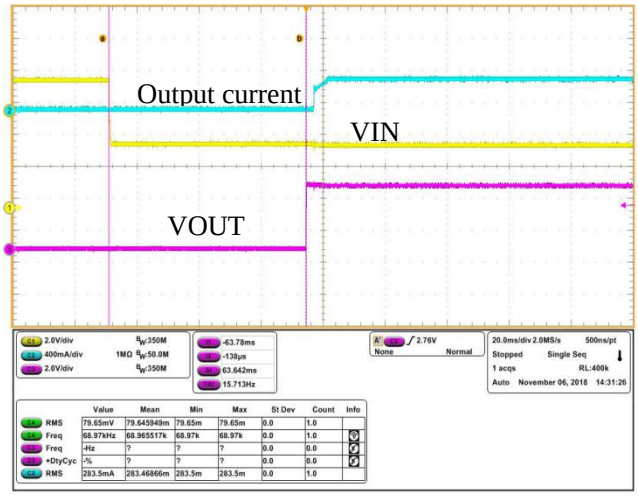

Fig3. OVP recovery waveform

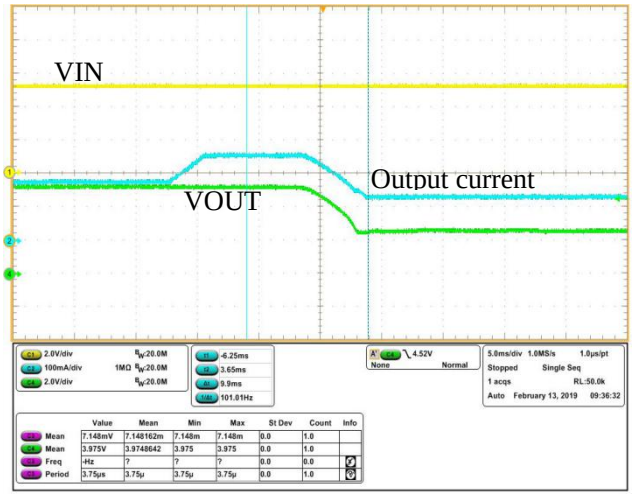

Fig4. OCP response (10kΩ/240mA)

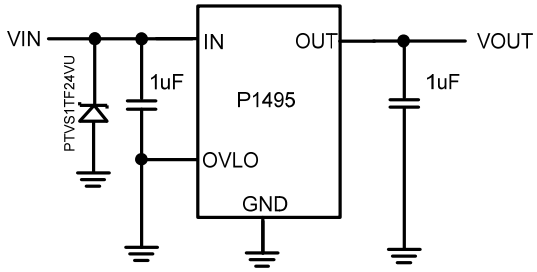

Fig5. Surge test schematic

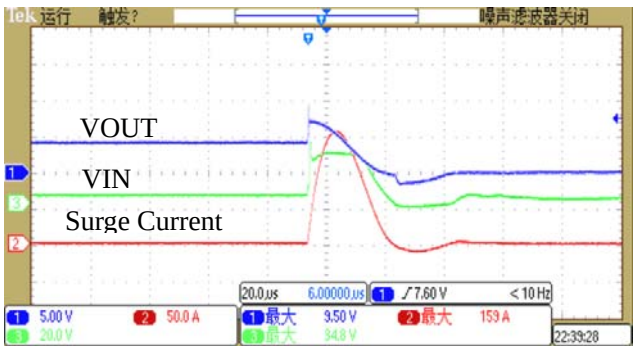

Fig6. 8-20 Surge test waveform (400V)

Product dimension (WLCSP-9L)

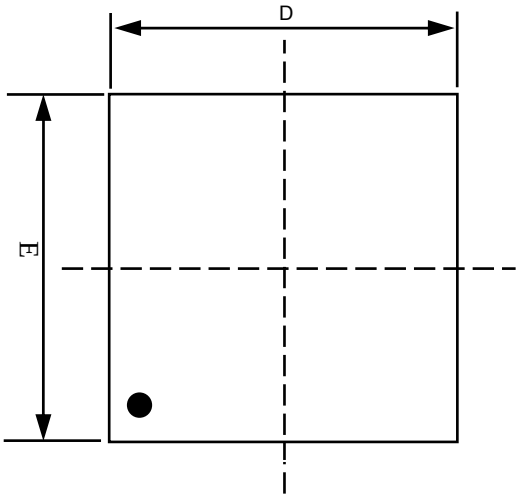

Top view

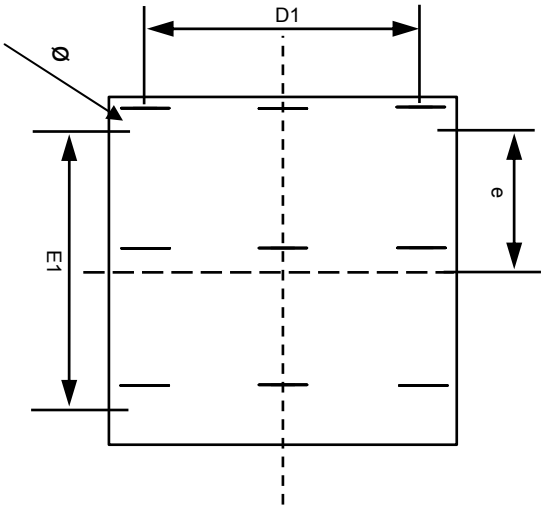

Bottom view

Dim	Millimeters		
	MIN	Typ.	MAX
A	0.475	0.505	0.535
A1	0.125	0.140	0.155
A2	0.325	0.340	0.355
D	1.070	1.100	1.130
E	1.070	1.100	1.130
e	0.400（typ.）		
D1	0.800（typ.）		
E1	0.800（typ.）		
Ø	0.180（typ.）		

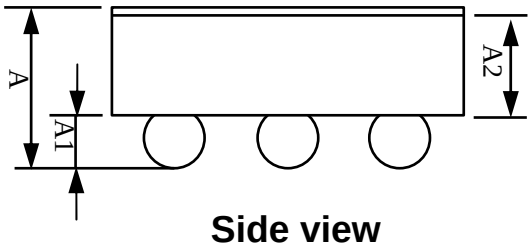

Side view

IMPORTANT NOTICE

and Prisemi® are registered trademarks of **Prisemi Electronics Co., Ltd (**Prisemi**)** ,Prisemi reserves the right to make changes without further notice to any products herein. Prisemi makes no warranty, representation or guarantee regarding the suitability of its products for any particular purpose, nor does Prisemi assume any liability arising out of the application or use of any product or circuit, and specifically disclaims any and all liability, including without limitation special, consequential or incidental damages. "Typical" parameters which may be provided in Prisemi data sheets and/or specifications can and do vary in different applications and actual performance may vary over time. All operating parameters, including "Typicals" must be validated for each customer application by customer's technical experts. Prisemi does not convey any license under its patent rights nor the rights of others. The products listed in this document are designed to be used with ordinary electronic equipment or devices, Should you intend to use these products with equipment or devices which require an extremely high level of reliability and the malfunction of with would directly endanger human life (such as medical instruments, aerospace machinery, nuclear-reactor controllers, fuel controllers and other safety devices), please be sure to consult with our sales representative in advance.

Website: http://www.prisemi.com
For additional information, please contact your local Sales Representative.